Illuminated mirrors

Geometries of light and technology
to illuminate, decorate, and set
the mood in any space



L&S

Illuminated mirrors

Geometries of light and technology
to illuminate, decorate, and set
the mood in any space

L&S

The mirror, beyond reflection

An integrated system in which reflection, light and design contribute to the quality of the space and the visual comfot of those who inhabit it.

The function of the mirror has evolved, moving beyond its natural setting – the bathroom – to find its way into any space and become an item capable of furnishing, illuminating and defining the atmosphere of a room. An architectural surface that amplifies the perception of space in the living room; a feature that defines the entrance hall; an essential accessory for daily personal care routines in bathrooms or bedrooms; an integral part of the retail shopping experience.

L&S responds to this evolution by offering two complementary collections, Vip and Vista, which embody two distinct approaches to the illuminated mirror, with solutions capable of meeting a wide range of needs, from the most exclusive and bespoke designs to complete, market-ready products.



Vip

P.6

Art of Reflection

A collection featuring a modern, sophisticated design, available in elegant finishes and customizable sizes, designed for settings where the mirror becomes the focal point of the space and its identity.

FRONT LIGHTING

Vip 1 p.12
Vip 2 p.14
Vip 4 p.16

FRONT LIGHTING + BACK LIGHTING

Vip 1+4 p.13
Vip 2+4 p.15
Vip 4+4 p.17



Vista

P.18

Functional essence

A product range designed to offer reliability, light quality, and technological completeness, featuring models with iconic geometries that fits easily into any environment.

FRONT LIGHTING + BACK LIGHTING

Vista CM p.22
Vista OM p.24
Vista RM p.26

Vip

The art of reflection in a collection of illuminated mirrors designed to be the distinctive highlight of any residential or commercial setting.

Authentic ‘Made in Italy’

The Vip collection reinterprets the illuminated mirror by creating an exclusive product with striking visual presence, capable of enhancing the perception of spaces and transforming light into a key architectural element.

Standout pieces in any residential setting, Vip mirrors can be made-to-measure, an ideal feature for installation in shops, showrooms or exhibition spaces, where large mirrors create welcoming and distinctive environments, conferring a contemporary, refined and distinctive look to the spaces.

IDEAL FOR

- any indoor environments
- damp locations (IP44)

FEATURES

- refined and versatile
- custom measures
- refined finishes
- integrated control
- anti-release feature
- furnishing light





Refined products with sophisticated finishes suited to any interior style

A collection where elegance meets technology, transforming a daily routine into an immersive and engaging lighting experience. Vip mirrors stand out for their build quality, enhanced by the careful selection of materials, such as anodized aluminum for the frame and opal polycarbonate for the light diffusers. Frontal lighting and decorative backlighting harmoniously complement the contemporary geometric design, defined by unique finishes that blend seamlessly with any interior style to create refined, memorable spaces.





Different lighting and control solutions for every need

VIP mirrors are available in three versions, featuring different front-lighting options: a single overhead light (VIP 1), dual side lights (VIP 2), or perimeter lighting (VIP 4). Characterized by an inclined light emission that ensures optimal, glare-free illumination, all models are also available with decorative perimeter backlighting and feature a convenient IRS sensor, concealed within the mirror's bottom profile, for On/Off control (the backlighting is operated separately via a second, dedicated sensor).



Vip

IP44

Illuminated mirror
with integrated switch.



DESCRIPTION

Anodised aluminium frame profile, 4mm mirror with safety back film, front lighting and perimeter backlighting with diffusers in opal polycarbonate.

Integrated power supply.

Integrated IRS sensor for On/Off control (version without switching system on request).

The frame profile features an anti-release edge to prevent accidental lifting; fixing brackets, screws and wall plugs included.

PRODUCT VERSIONS

Vip is available in three versions with different front lighting options:

- **Vip 1**
  single top light
- **Vip 2**
  dual side lighting
- **Vip 4**
  perimeter lighting

All models are also available in the '**+4**' version with decorative perimeter backlighting



INTENDED USE

Stylish and practical, it is suitable for walk-in wardrobes, bedrooms, contemporary living spaces, shops and showrooms.

IP44 protection rating, for use in damp environments (bathrooms).

FINISHES

Aluminium frame available in four elegant finishes:
- Titanium bronze
- Black
- Brill (shiny steel)
- Vintage gold



Vip 1

IP44 220÷240V NW IRS

1x Front light

L x H (mm) - Custom measures on request

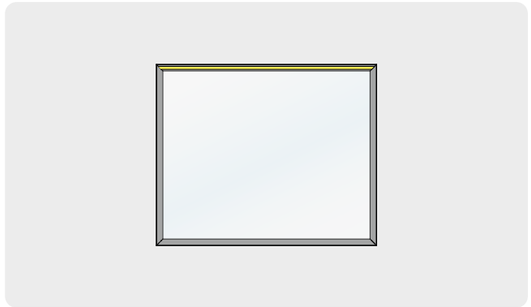

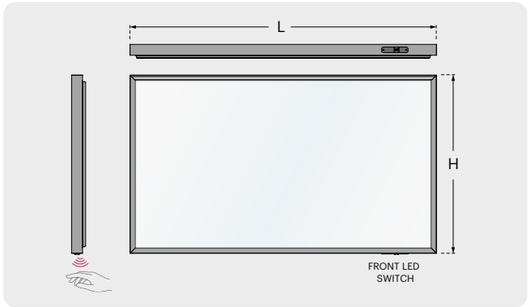

SWITCHING AND CONTROL SYSTEMS

INTEGRATED CONTROL P.<?>

IRS Sensor

Detects hand movements for On-Off.

IRS

WITHOUT SWITCHING SYSTEM P.<?>

On-Off control via switched outlet. ON REQUEST

POWER SUPPLY

Integrated Driver

Supplied with mains power cord (220-240V AC), terminal block not included.

V IN: 220-240V AC



VIP 1 IRS NW	V IN 220-240V AC	H (mm)	L (mm)	W	BRONZE	BLACK
Integrated IRS Sensor MONO Light Source: 4000K (3000K on request) Not dimmable.	LED 12W/m - IP54 CRI>90 F	700 mm	800 mm	13W	**547200017**	**547200021**
		900 mm		14W	**547200018**	**547200022**
		1200 mm		17W	**547200019**	**547200023**
		1400 mm		22W	**547200020**	**547200024**

FINISHES

TITANIUM BRONZE



BLACK



BRILL (SHINY STEEL)
on request



VINTAGE GOLD
on request



SECTION (mm)

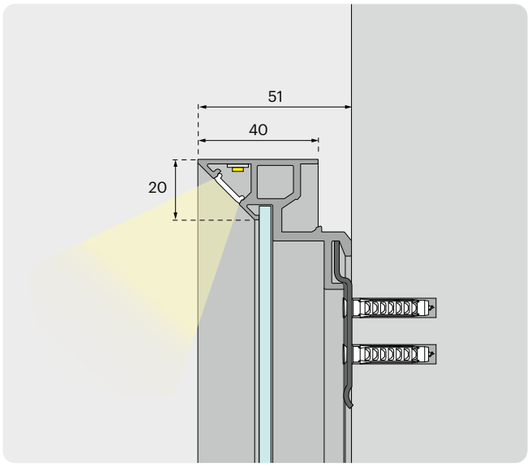

Vip 1+4

IP44 220÷240V NW IRS

1x Front light + Backlighting

L x H (mm) - Custom measures on request

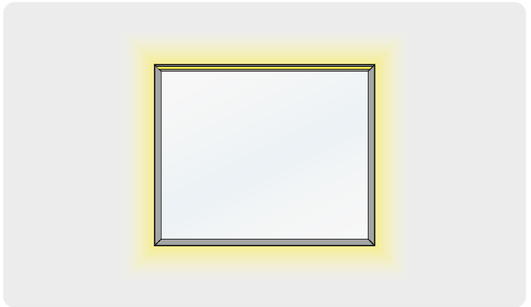

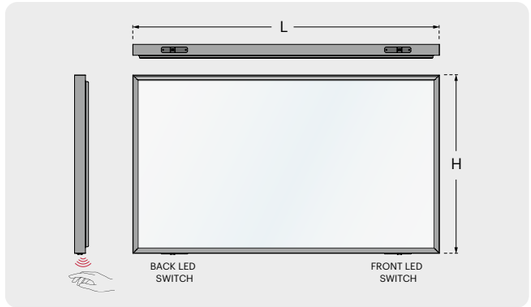

SWITCHING AND CONTROL SYSTEMS

INTEGRATED CONTROL P.<?>

2x IRS Sensors (Front light + Backlighting)

Detects hand movements for On-Off.

IRS

WITHOUT SWITCHING SYSTEM P.<?>

On-Off control via switched outlet. ON REQUEST

POWER SUPPLY

Integrated Driver

Supplied with mains power cord (220-240V AC), terminal block not included.

V IN: 220-240V AC



VIP 1+4 IRS NW	V IN 220-240V AC	H (mm)	L (mm)	W	BRONZE	BLACK
Integrated IRS Sensor MONO Light Source: 4000K (3000K on request) Not dimmable.	Front light: LED 12W/m - IP54 Backlighting: LED 4,5W/m - IP20 CRI>90 F + E	700 mm	800 mm	35W	**547200025**	**547200029**
		900 mm		37W	**547200026**	**547200030**
		1200 mm		45W	**547200027**	**547200031**
		1400 mm		51W	**547200028**	**547200032**

FINISHES

TITANIUM BRONZE



BLACK



BRILL (SHINY STEEL)
on request



VINTAGE GOLD
on request



SECTION (mm)

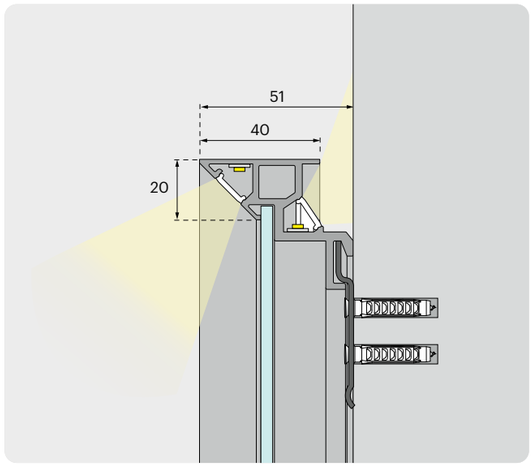

Vip 2

IP44 · 220÷240V · NW · IRS

2x Front lights



L x H (mm) - Custom measures on request

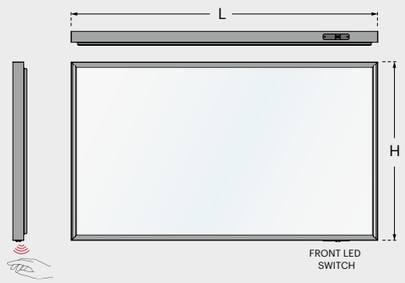

SWITCHING AND CONTROL SYSTEMS

INTEGRATED CONTROL P.<?>

IRS Sensor

Detects hand movements for On-Off.

WITHOUT SWITCHING SYSTEM P.<?>

On-Off control via switched outlet. ON REQUEST

POWER SUPPLY

Integrated Driver

Supplied with mains power cord (220-240V AC), terminal block not included.

V IN: 220-240V AC



VIP 2 IRS NW	V IN 220-240V AC	H (mm)	L (mm)	W	BRONZE	BLACK
Integrated IRS Sensor MONO Light Source: 4000K (3000K on request) Not dimmable.	LED 12W/m - IP54 CRI>90 F	700 mm	800 mm	22W	**547200033**	**547200037**
		900 mm		22W	**547200034**	**547200038**
		1200 mm		22W	**547200035**	**547200039**
		1400 mm		22W	**547200036**	**547200040**

FINISHES

TITANIUM BRONZE



BLACK



BRILL (SHINY STEEL)
on request



VINTAGE GOLD
on request



SECTION (mm)

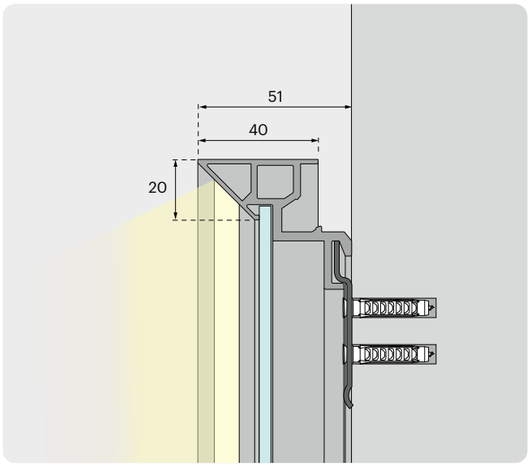

Vip 2+4

IP44 · 220÷240V · NW · IRS

2x Front light + Backlighting

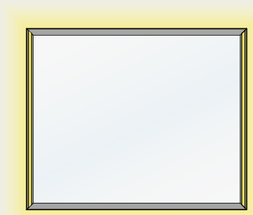

L x H (mm) - Custom measures on request

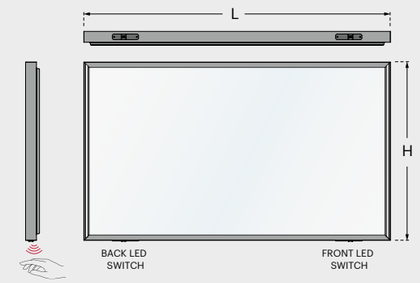

SWITCHING AND CONTROL SYSTEMS

INTEGRATED CONTROL P.<?>

2x IRS Sensors (Front light + Backlighting)

Detects hand movements for On-Off.

WITHOUT SWITCHING SYSTEM P.<?>

On-Off control via switched outlet. ON REQUEST

POWER SUPPLY

Integrated Driver

Supplied with mains power cord (220-240V AC), terminal block not included.

V IN: 220-240V AC



VIP 2+4 IRS NW	V IN 220-240V AC	H (mm)	L (mm)	W	BRONZE	BLACK
Integrated IRS Sensor MONO Light Source: 4000K (3000K on request) Not dimmable.	Front light: LED 12W/m - IP54 Backlighting: LED 4,5W/m - IP20 CRI>90 F + E	700 mm	800 mm	42W	**547200041**	**547200045**
		900 mm		44W	**547200042**	**547200046**
		1200 mm		47W	**547200043**	**547200047**
		1400 mm		51W	**547200044**	**547200048**

FINISHES

TITANIUM BRONZE



BLACK



BRILL (SHINY STEEL)
on request



VINTAGE GOLD
on request



SECTION (mm)

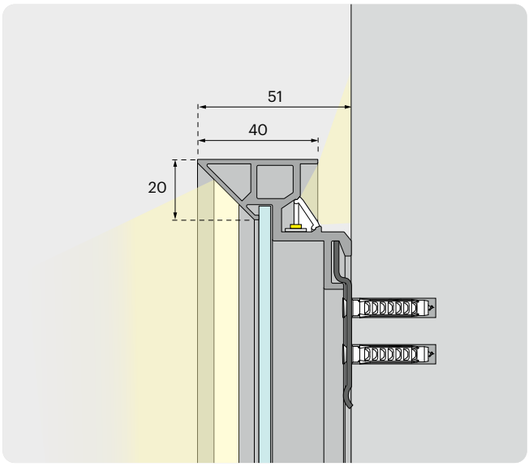

Vip 4

IP44 220÷240V NW IRS

4x Front lights

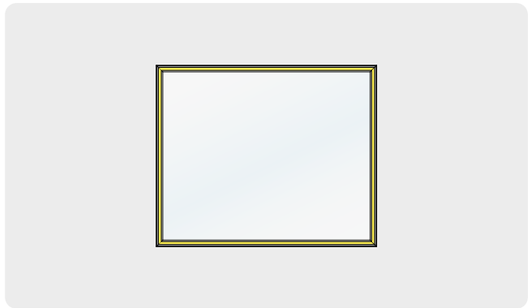

L x H (mm) - Custom measures on request

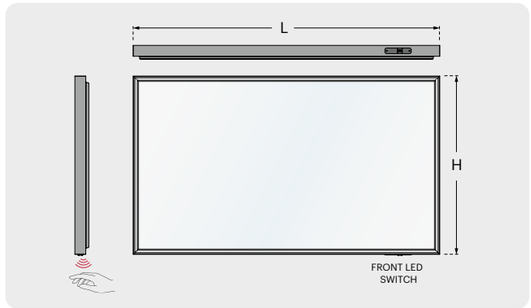

SWITCHING AND CONTROL SYSTEMS

INTEGRATED CONTROL P.<?>

IRS Sensor

Detects hand movements for On-Off.

WITHOUT SWITCHING SYSTEM P.<?>

On-Off control via switched outlet. ON REQUEST

POWER SUPPLY

Integrated Driver

Supplied with mains power cord (220-240V AC), terminal block not included.

V IN: 220-240V AC



VIP 4 IRS NW	V IN 220-240V AC	H (mm)	L (mm)	W	BRONZE	BLACK
Integrated IRS Sensor MONO Light Source: 4000K (3000K on request) Not dimmable.	LED 12W/m - IP54 CRI>90 F	700 mm	800 mm	44W	**547200049**	**547200053**
		900 mm		46W	**547200050**	**547200054**
		1200 mm		53W	**547200051**	**547200055**
		1400 mm		57W	**547200052**	**547200056**

FINISHES

TITANIUM BRONZE



BLACK



BRILL (SHINY STEEL)
on request



VINTAGE GOLD
on request



SECTION (mm)

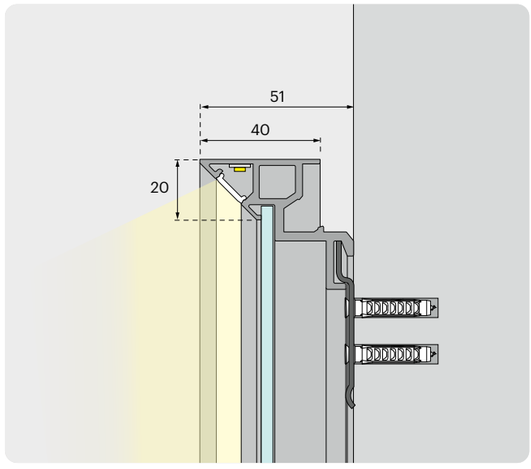

Vip 4+4

IP44 220÷240V NW IRS

4x Front light + Backlighting

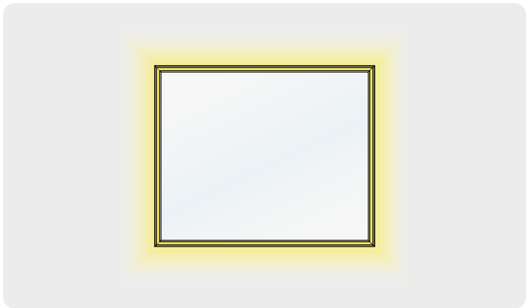

L x H (mm) - Custom measures on request

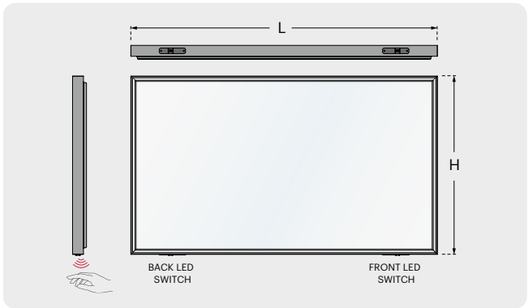

SWITCHING AND CONTROL SYSTEMS

INTEGRATED CONTROL P.<?>

2x IRS Sensors (Front light + Backlighting)

Detects hand movements for On-Off.

WITHOUT SWITCHING SYSTEM P.<?>

On-Off control via switched outlet. ON REQUEST

POWER SUPPLY

Integrated Driver

Supplied with mains power cord (220-240V AC), terminal block not included.

V IN: 220-240V AC



VIP 4+4 IRS NW	V IN 220-240V AC	H (mm)	L (mm)	W	BRONZE	BLACK
Integrated IRS Sensor MONO Light Source: 4000K (3000K on request) Not dimmable.	Front light: LED 12W/m - IP54 Backlighting: LED 4,5W/m - IP20 CRI>90 F + E	700 mm	800 mm	57W	**547200057**	**547200060**
		900 mm		64W	**547200058**	**547200061**
		1200 mm		82W	**547200059**	**547200062**
		1400 mm		90W	**547200064**	**547200063**

FINISHES

TITANIUM BRONZE



BLACK

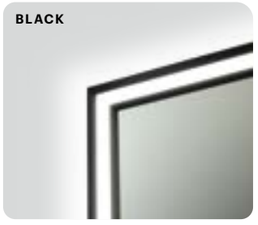

BRILL (SHINY STEEL)
on request



VINTAGE GOLD
on request



SECTION (mm)

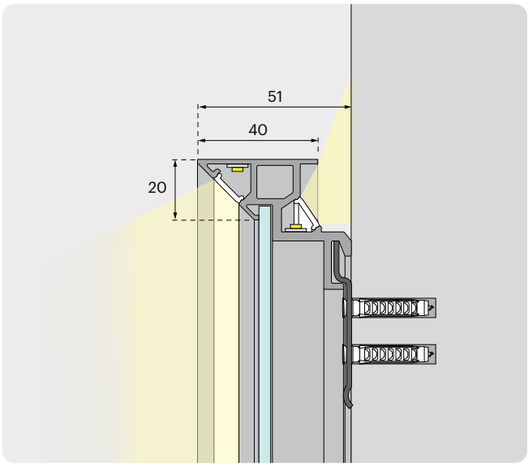

Vista

Geometries of light and technology, a contemporary aesthetic that blends seamlessly with any interior style.

Functional essence, luminous surfaces with iconic geometries in which shape, light and technology naturally interact to blend seamlessly into the surroundings, enhancing any space.

The Vista collection features lighted mirrors capable of creating evocative atmospheres, where front lighting, decorative backlighting and a practical anti-fog device define the user experience: natural elements of the contemporary bathroom, Vista mirrors are also ideally suited to the bedroom, where they can be used as a functional addition to a make-up area or to enhance the wall by highlighting the mirror’s silhouette.

IDEAL FOR

- bathroom (IP44)
- bedroom
- make-up area

FEATURES

- integrated front and backlighting
- anti-fog pad
- touch controls
- adjustable color temperature



Geometric balance between functional and ambient lighting

Round, oval and rectangular: three shapes with defined dimensions and a dual lighting system that combines performance and functionality in a clean, minimalist design, created to enhance any space. The front light assists everyday personal care activities with direct, functional illumination, designed to provide clear and comfortable vision. The decorative backlighting creates a refined luminous effect on the wall and highlights the mirror's silhouette, contributing to an immersive, evocative setting.

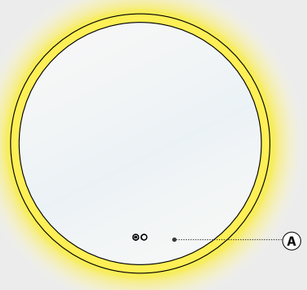

VISTA CM

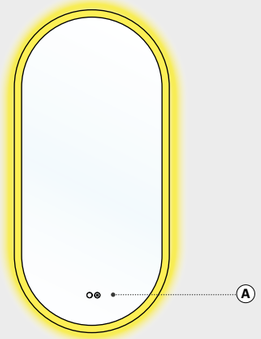

VISTA OM

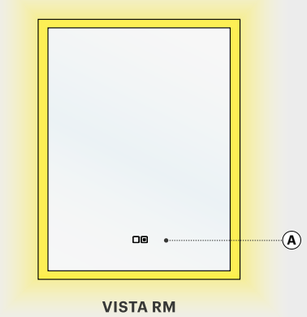

VISTA RM

Integrated touch controls and anti-fog device

Technological solutions for a simpler, even more comfortable user experience, with two modern backlit touch controls integrated into the mirror. The On/Off button also allows you to adjust both the light intensity and the color temperature to suit your needs; the second button activates the anti-fog device, keeping the mirror's surface free from condensation – a practical and useful feature in the bathroom. All mirrors are fitted with an integrated power supply encased in an IP44-rated housing, complete with mains connection cable.

Easy and intuitive color temperature adjustment

The EMOTION LED integrated into all Vista mirrors allows three different colour temperatures settings (3000K / 4500K / 6500K) to adapt the lighting to personal preferences and the room's style: a technology that makes the mirror exceptionally versatile, able to blend with the surroundings in different interior styles, according to the personal taste of those who use it.

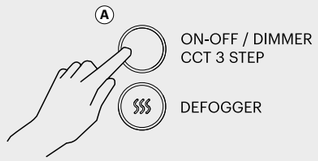







Vista CM

IP44

Illuminated mirror
with integrated switch.



DESCRIPTION

Aluminum frame, 4mm mirror with safety back film, etched on the perimeter for front lighting, and sides with opal diffusers for decorative backlighting.

Integrated anti-fog device and power supply.

Illuminated touch controls on mirror for On/Off - Dimmer control, color temperature adjustment (in 3 steps), and anti-fog function.

Mounting brackets pre-fixed on the mirror, screws and dowels included.

INTENDED USE

IP44 protection rating, ideal for installation in bathrooms.

Versatile, it is also suitable for use in bedrooms, in both residential settings and the hotel sector, either as a decorative feature or as a functional addition to a dressing table in the make-up area.

FINISHES

Etched front glass with opal sides.



Vista CM

220÷240V TCS

Perimeter front light + Wallwasher

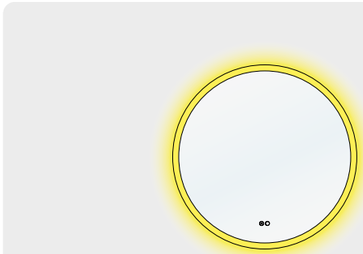

(mm)

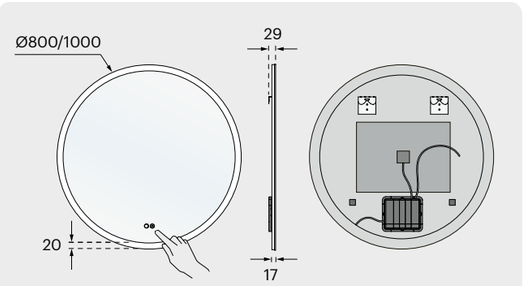

SWITCHING AND CONTROL SYSTEMS

INTEGRATED CONTROL

Touch Switch (TCS)

TCS

On/Off functions, brightness adjustment (5–100%), 3-step colour temperature adjustment (3000K–4500K–6500K). The switch controls both front and backlighting at the same time.

POWER SUPPLY

Integrated Driver

Supplied with mains power cord (220-240V AC).

IP44 terminal block included.

V IN: 220-240V AC



VISTA CM		CCT	(mm)	W	CODE
Integrated touch controls Dimmable.	V IN 220-240V AC CRI>80 F	EMOTION 3000K + 4500K + 6500K	**Ø800mm** 1560lm	44W - 20W LED - 24W Defogger	**532900003**
			Ø1000mm 1950lm	56W - 25W LED - 31W Defogger	**532900004**

ON-OFF / DIMMER
CCT 3 STEP

DEFOGGER

Vista OM

IP44

Illuminated mirror
with integrated switch.



DESCRIPTION

Aluminum frame, 4mm mirror with safety back film, etched on the perimeter for front lighting, and sides with opal diffusers for decorative backlighting.

Integrated anti-fog device and power supply.

Illuminated touch controls on mirror for On/Off - Dimmer control, color temperature adjustment (in 3 steps), and anti-fog function.

Mounting brackets pre-fixed on the mirror, screws and dowels included.

INTENDED USE

IP44 protection rating, ideal for installation in bathrooms.

Versatile, it is also suitable for use in bedrooms, in both residential settings and the hotel sector, either as a decorative feature or as a functional addition to a dressing table in the make-up area.

FINISHES

Etched front glass with opal sides.



Vista OM

220÷240V TCS

Perimeter front light + Wallwasher

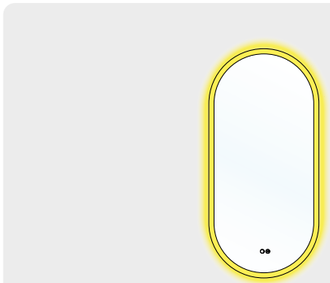

(mm)

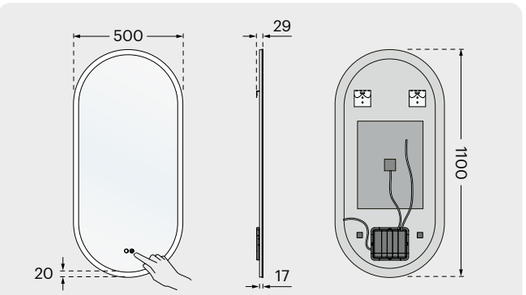

SWITCHING AND CONTROL SYSTEMS

INTEGRATED CONTROL

Touch Switch (TCS)

TCS

On/Off functions, brightness adjustment (5–100%), 3-step colour temperature adjustment (3000K–4500K–6500K). The switch controls both front and backlighting at the same time.

POWER SUPPLY

Integrated Driver

Supplied with mains power cord (220-240V AC).

IP44 terminal block included.

V IN: 220-240V AC



VISTA OM		CCT	(mm)	W	CODE
Integrated touch controls Dimmable. ON-OFF / DIMMER CCT 3 STEP DEFOGGER	V IN 220-240V AC 1720lm CRI>80 F	EMOTION 3000K + 4500K + 6500K	1100 x 500 mm	46W - 22W LED - 24W Defogger	**532900005**

Vista RM

IP44

Illuminated mirror
with integrated switch.



DESCRIPTION

Aluminum frame, 4mm mirror with safety back film, etched on the perimeter for front lighting, and sides with opal diffusers for decorative backlighting.

Integrated anti-fog device and power supply.

Illuminated touch controls on mirror for On/Off - Dimmer control, color temperature adjustment (in 3 steps), and anti-fog function.

Mounting brackets pre-fixed on the mirror, screws and dowels included.

INTENDED USE

IP44 protection rating, ideal for installation in bathrooms.

Versatile, it is also suitable for use in bedrooms, in both residential settings and the hotel sector, either as a decorative feature or as a functional addition to a dressing table in the make-up area.

INSTALLATION

Reversible mirror, can be installed vertically or horizontally.

FINISHES

Etched front glass with opal sides.



Vista RM

220÷240V TCS

Perimeter front light + Wallwasher

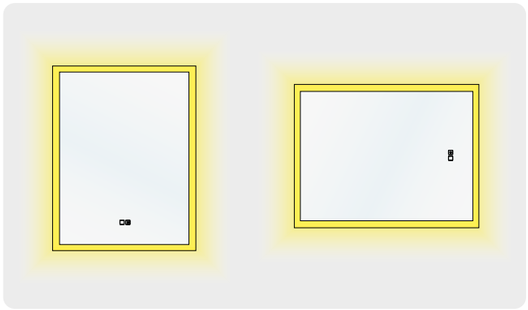

(mm)

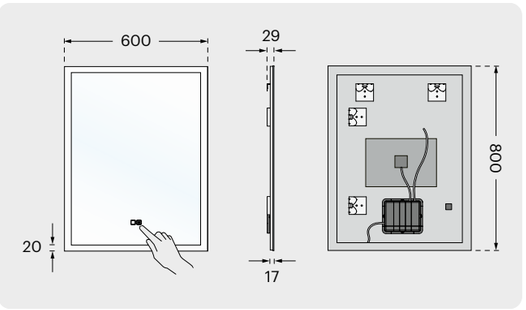

SWITCHING AND CONTROL SYSTEMS

INTEGRATED CONTROL

Touch Switch (TCS)

TCS

On/Off functions, brightness adjustment (5–100%), 3-step colour temperature adjustment (3000K–4500K–6500K). The switch controls both front and backlighting at the same time.

POWER SUPPLY

Integrated Driver

Supplied with mains power cord (220-240V AC).

IP44 terminal block included.

V IN: 220-240V AC



VISTA RM		CCT	(mm)	W	CODE
Integrated touch controls Dimmable. ON-OFF / DIMMER CCT 3 STEP DEFOGGER	V IN 220-240V AC 1640lm CRI>80 F	EMOTION 3000K + 4500K + 6500K	800 x 600 mm Reversible	33W - 21W LED - 12W Defogger	**532900002**

The information in this catalog may be subject to errors.
The items, their characteristics, data, and dimensions contained therein are not binding and may be subject to change without notice from the company.

L&S ITALIA SPA

ITALY

Headquarters
Via L. Zanussi, 8
Maron di Brugnera (PN)
+39 0434 616611
info@ls-light.com

Varese
Via Pacinotti, 64
Varese (VA)
+39 0332 491247

Tavullia
Via del Lavoro, 4
Tavullia (PU)
+39 0721 901123

SUBSIDIARIES

GERMANY

L&S Deutschland GmbH
Daimlerring, 34
Rödinghausen
+49 5223 8790-0
info@ls-light.de

CHINA

LS Lighting
(Shanghai) Co., Ltd.
No. 255, LongPan Rd.,
Malu Town,
Jiading District, Shanghai
+86 021 6915 3825
info.china@ls-light.com

USA

L&S Lighting Corporation
1505 Pavilion Place, Suite A
Norcross, Georgia
+1 877 877 0757
info.us@ls-light.com

ls-light.com

