NEU100 series

Upright vacuum cleaner; household type

Owner's Guide

Thank you for purchasing your new Eureka vacuum!

Important instructions

For easy assembly, please take a few moments to read this owner's guide.

If you have questions about your new vacuum, please contact our customer service HELPLINE at 1-800-282-2886.
We're here to help!

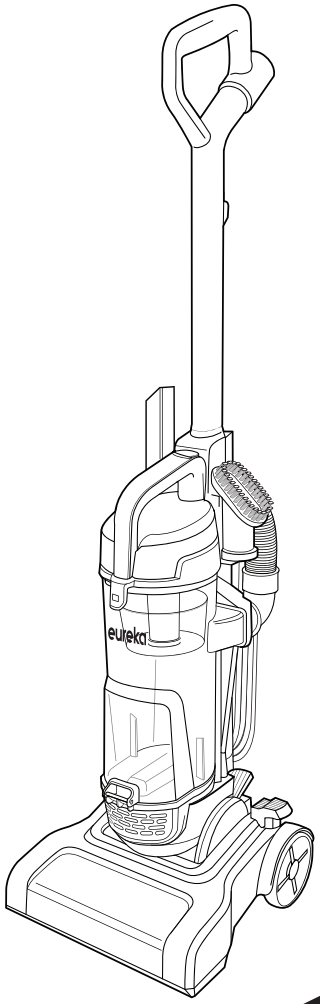

THE eureka CLEAN PROMISE
PERFORMANCE
QUALITY • VALUE

Eureka stands by our Clean Promise seal. Learn more at www.eureka.com/cleanpromise

www.eureka.com

eureka

Where to find important vacuum information

Keep this information

Write the model, type and serial number here:

Date of purchase (keep your receipt) _____

Model number and type_____

Serial number _____

Find these numbers on a label on the lower back side of the vacuum cleaner. Refer to these numbers when ordering parts and accessories or if service is needed.

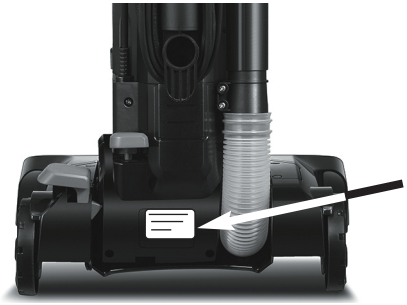

This Owner's Guide provides important instructions to prolong the life of your Eureka vacuum cleaner.

Registration: To register your product visit **www.eureka.com** and click on the 'Register Your Product' link in the top right corner.

Inspection: Carefully unpack and inspect your new Eureka vacuum cleaner for shipping damage. Each unit is tested and thoroughly inspected before shipping. For instructions regarding any shipping damage, call the Eureka Customer Service **HELPLINE** at **1-800-282-2886** immediately.

Contents

Important safeguards. 3
How to identify parts of your vacuum cleaner. 4
How to assemble your vacuum cleaner 5
Operation 6
How to use your vacuum cleaner 7
Maintenance And Care 8
Emptying And Cleaning Dust Cup 8
Cleaning Dust Cup Filter. 9
Cleaning Cyclone 9
Replace Brush Roll. 10
Replace Drive Belt 11
Problem solving 12
The Eureka one-year limited warranty 13

⚠ Follow caution information wherever you see this symbol.

IMPORTANT SAFEGUARDS

When using an electrical appliance, basic precautions should always be followed, including the following:

READ ALL INSTRUCTIONS BEFORE USING THIS VACUUM CLEANER

WARNING



To reduce the risk of fire, electric shock, or injury:

- Do not use outdoors or on wet surfaces.
- **Do not leave vacuum cleaner when plugged in.** Turn off the switch and unplug the electrical cord when not in use and before servicing.
- Do not allow to be used as a toy. Close attention is necessary when used by or near children.
- Use only as described in this manual. Use only manufacturer's recommended attachments.
- Do not use with damaged cord or plug. If vacuum cleaner is not working as it should, has been dropped, damaged, left outdoors, or dropped into water, call the Eureka Customer Service **HELPLINE** at **1-800-282-2886**.
- Do not pull or carry by cord. Do not use cord as a handle. Do not close a door on cord or pull cord around sharp edges or corners. Do not run vacuum cleaner over cord. Keep cord away from heated surfaces.
- Do not use extension cords or outlets with inadequate current carrying capacity.
- Turn off all controls before unplugging.
- Do not unplug by pulling on cord. To unplug, grasp the plug, not the cord.
- Do not handle plug or vacuum cleaner with wet hands.
- Do not put any objects into openings. Do not use with any openings blocked; keep free of dust, lint, hair, and anything that may reduce airflow.
- This vacuum cleaner creates suction and contains a revolving brush roll. Keep hair, loose clothing, fingers, and all parts of body away from openings and moving parts.
- Do not place vacuum cleaner on furniture or stairs as the brush roll may cause damage. Use extra care when cleaning stairs. Place vacuum cleaner on floor with the handle in storage position while using attachments.
- Do not pick up anything that is burning or smoking, such as cigarettes, matches, or hot ashes.
- Do not use without dust cup, filter and screen in place.
- Belt pulleys can become hot during normal use. To prevent burns, avoid touching the belt pulley when servicing the drive belt.
- Do not use to pick up flammable or combustible liquids such as gasoline, or use in areas where they may be present.
- Store your vacuum cleaner indoors in a cool, dry area.
- Keep your work area well lit.
- Unplug electrical appliances before vacuuming them.
- **WARNING:** This product can expose you to chemicals including Di(2-ethylhexyl)phthalate (DEHP), which is known to the State of California to cause cancer and to cause birth defects or other reproductive harm. For more information go to www.P65Warnings.ca.gov.

SAVE THESE INSTRUCTIONS

To reduce the risk of electric shock, this appliance has a polarized plug (one blade is wider than the other). This plug will fit in a polarized outlet only one way. If the plug does not fit fully into the outlet, reverse the plug. If it still does not fit, contact a qualified electrician to install the proper outlet. Do not change the plug in any way.



Motor

Do Not Oil the motor or the brush roll at any time. The bearings are permanently lubricated and sealed.

How to identify parts of your vacuum cleaner

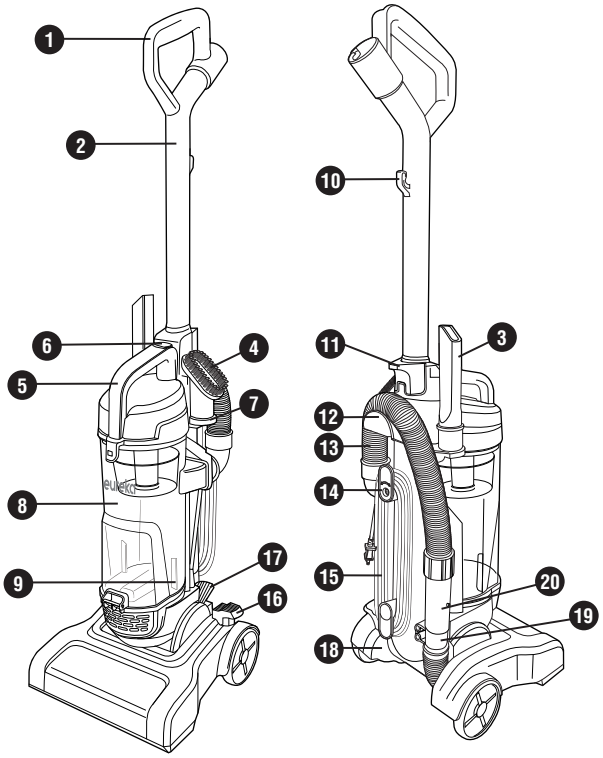

1. Handle
2. Detachable Extension Wand
3. CreviceTool
4. Dusting Brush
5. Carrying Handle
6. Dust Cup Release Button
7. Accessory Holder
8. Dust Cup
9. Dust Cup Empty Button
10. Cord Hook
11. Extension Wand Release
12. Hose hook
13. Stretch Hose
14. Upper Cord Wrap
15. Power Cord
16. Handle Recline Pedal
17. Power Switch Pedal
18. Product Rating Label and Serial Number
19. Hose Holder
20. Hose Handle

How to assemble your vacuum cleaner

Please Note: Always remove the plug from the power socket before attaching or removing accessories. Ensure all filters are fitted, and fitted correctly before using.

⚠**WARNING:** DO NOT plug in your vacuum cleaner until you have completely assembled it per the following instructions and are familiar with all instructions and operation procedures.

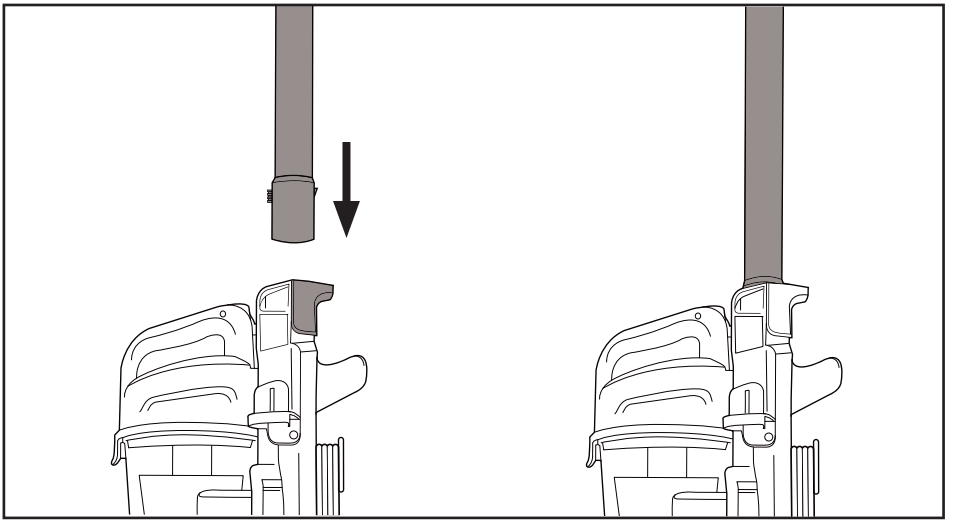

Insert the handle into the base and push until you hear it click and lock into place.

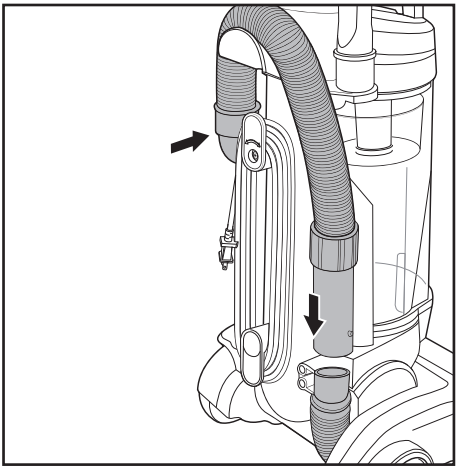

Insert the angled end of the hose into the upper hose holder and rotate clockwise to join. Then insert the hose handle into the lower hose holder.

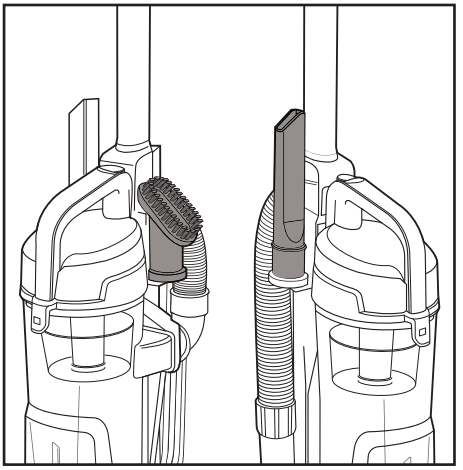

Place the crevice tool and brush tool accessories onto the on-board storage as shown.

Operation

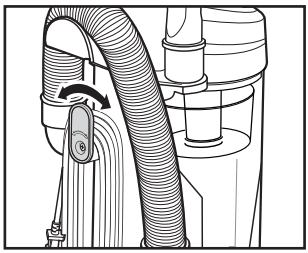

Twist the upper cord wrap to release the power cord and plug in your vacuum.

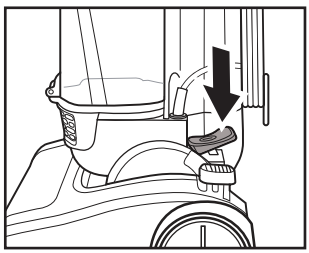

Step on the power switch pedal and pull back on handle, to engage for operation.

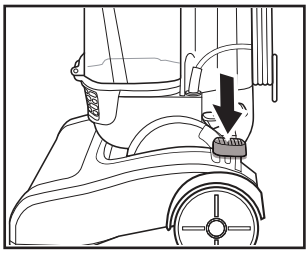

Press the handle recline pedal with your foot to place your vacuum in one of three positions.

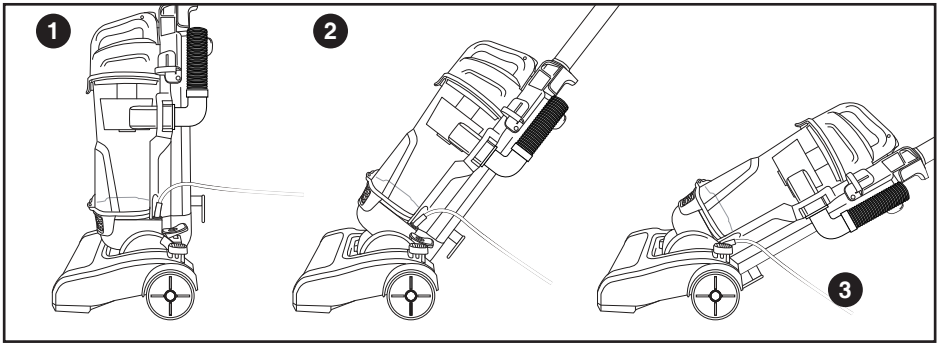

1. Upright - For storage and transporting.
2. Normal Cleaning - Press handle recline pedal once. Use for most household floor cleaning tasks.
3. Low Cleaning - With the vacuum in normal cleaning position, press handle recline pedal again. Use for reaching under low furniture, such as tables, chairs or beds.

Using Accessories

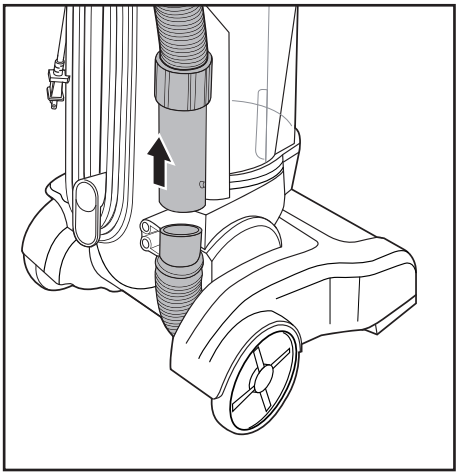

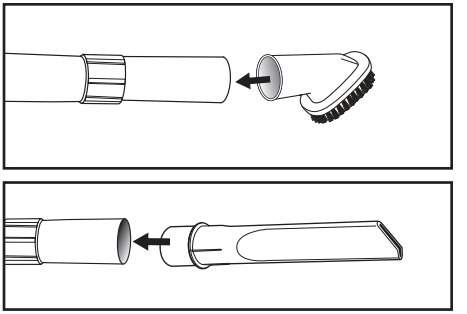

Remove hose handle from the hose holder. You can insert the crevice tool or dusting brush into the hose handle.

Using the Detachable Extension Wand

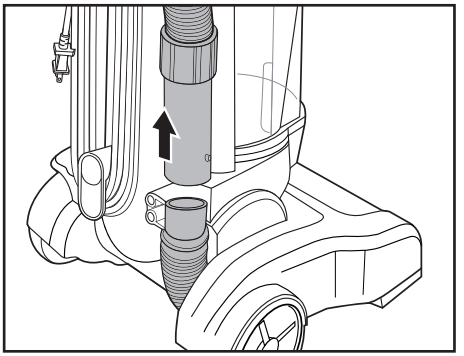

Remove hose handle from the hose holder.

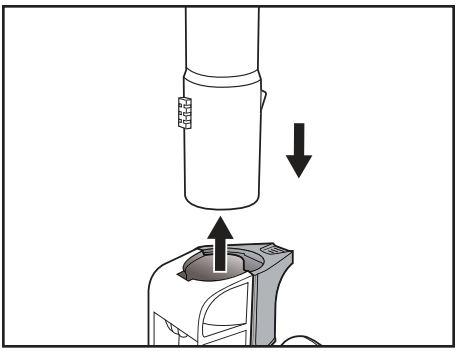

Remove the handle from the body of the vacuum by pressing the extension wand release and pulling up on the handle.

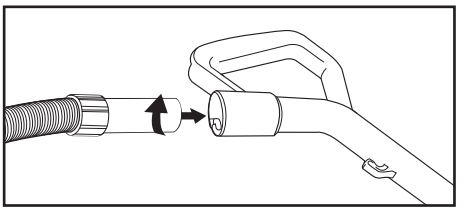

Place the hose handle into the handle port and turn counter-clockwise until locked in place.

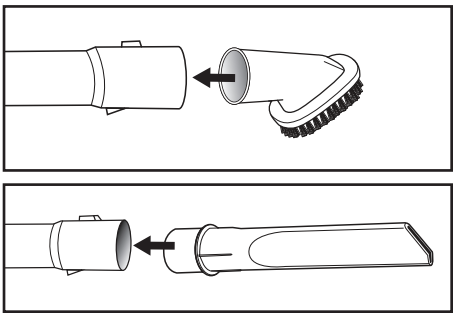

You can insert the crevice tool or dusting brush into the extension wand.

Maintenance And Care - Emptying And Cleaning Dust Cup

⚠WARNING: Turn off and unplug vacuum cleaner before performing maintenance to the vacuum cleaner.

Emptying and cleaning the dust cup

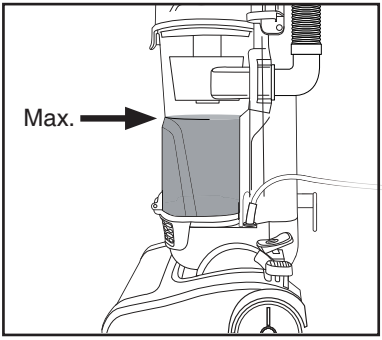

The dust cup needs to be emptied when dirt reaches the “Max” line.

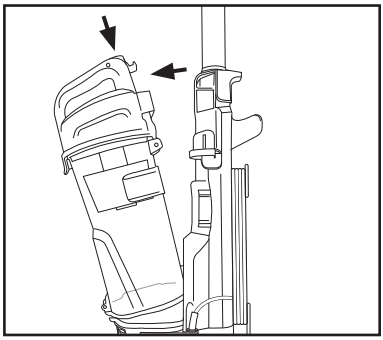

Press dust cup release button to remove the dust cup.

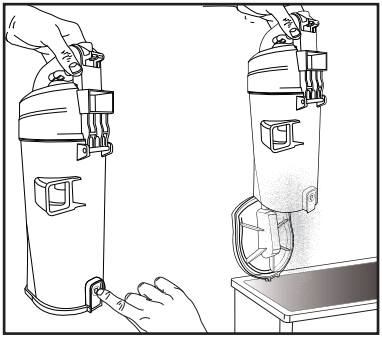

Hold dust cup over garbage bin and press the open button on the bottom of the cup, allowing the dust to empty.

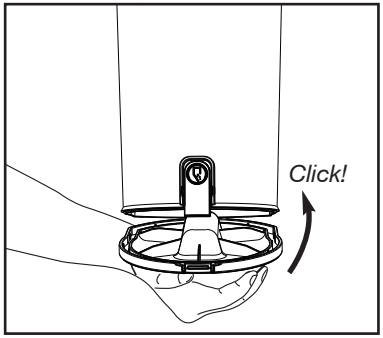

Close the base of the dust cup, align the cup base back onto the machine and push until it clicks back into place.

Maintenance And Care - Cleaning Dust Cup Filter

⚠WARNING: Turn off and unplug vacuum cleaner before performing maintenance to the vacuum cleaner.



1. Open the dust cup filter lid, located on the top of the cup.

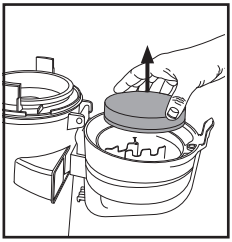

2. Remove the dust cup foam filter.

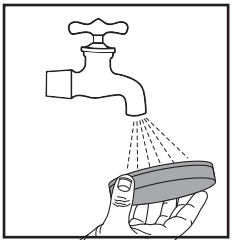

3. Hand wash the foam filter.

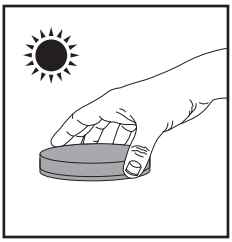

4.Allow filter to dry 24 hours before putting back into vacuum cleaner.

Maintenance And Care - Cleaning Cyclone

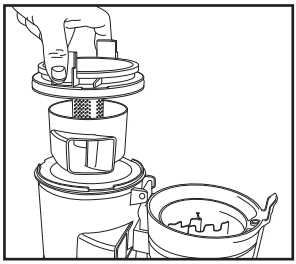

5.Lift cyclone to remove for cleaning dirt and debris.

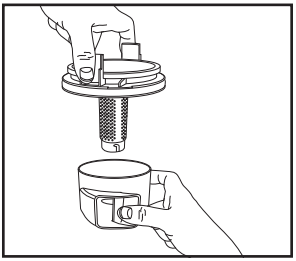

6.Twist the inlet cup clockwise to remove for cleaning dirt and debris.

DO NOT operate without filter installed.
DO NOT wash dust cup in the dishwasher.
DO NOT install damp filter.

⚠CAUTION: Do not turn appliance on when dust cup is removed.

- In order to keep the suction force optimized, the dust cup and filters must be cleaned regularly.
- Reassemble after cleaning

Maintenance And Care - Replace Brush Roll

⚠WARNING: Turn off and unplug vacuum cleaner before performing maintenance to the vacuum cleaner.

You should check your cleaner's brush roll and drive belt regularly for wear or damage. You should also clean the brush and brush ends by removing string, hair and carpet fibers. These can wrap around the brush and hamper its ability to effectively clean your carpet. Also remove any debris that has accumulated under the brush cover.

1. Turn off vacuum and unplug from electrical outlet.
2. Place vacuum upside down with brush roll facing upwards.
3. Remove the six screws as shown with a small Phillips screwdriver.
4. Lift off brush cover.
5. Grasp floor brush at both ends and remove by lifting out.
6. Clean string, hair and other debris from floor brush, motor pulley, and drive belt.
7. Check floor brush for worn areas and replace if needed.
8. Check air passageway for obstructions. Remove debris from this area.
9. When finished cleaning, reposition floor brush and drive belt.
   Then replace the brush cover and re-install the five screws.
10. Turn floor brush by hand several times in the direction of the motor pulley.
    If properly installed, the drive belt will align itself on floor brush.

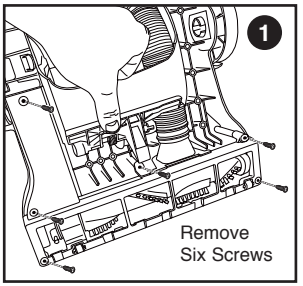

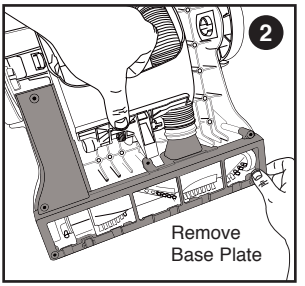

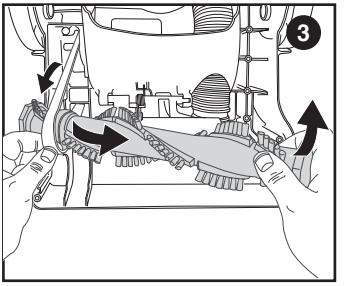

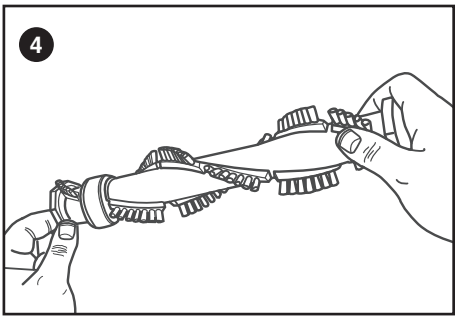

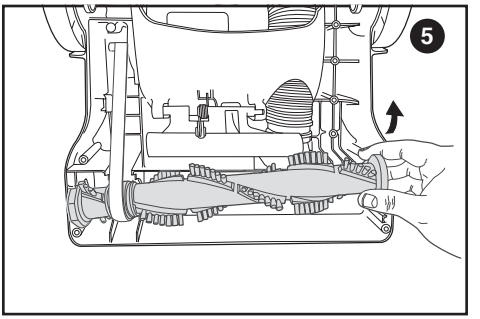

Maintenance And Care - Replace Drive Belt

⚠WARNING: Turn off and unplug vacuum cleaner before performing maintenance to the vacuum cleaner.

Check the drive belt carefully for wear, cuts and stressed areas. If the drive belt appears worn, you will need to replace it.

To remove the drive belt, read the instructions and follow the drawings below:

1. Grasp the old drive belt and remove from motor shaft. Discard old drive belt.
2. Loop new drive belt over motor shaft and stretch other end over floor brush in the space provided between the bristles.
4. Place ends of floor brush down into slots on sides as shown.
5. Turn floor brush by hand several times in the direction of the motor shaft. If properly installed, drive belt will align itself on floor brush.
6. Replace brush cover and six screws.

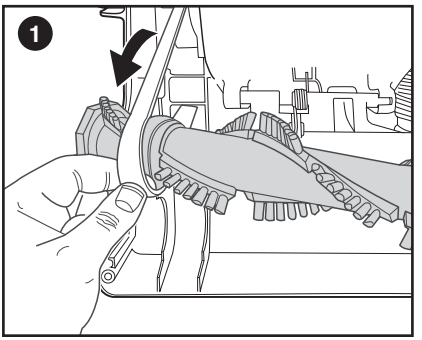

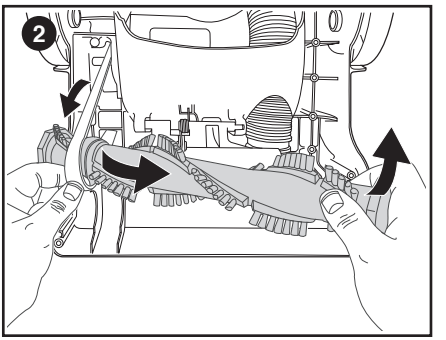

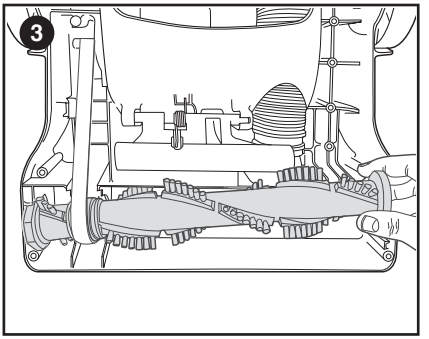

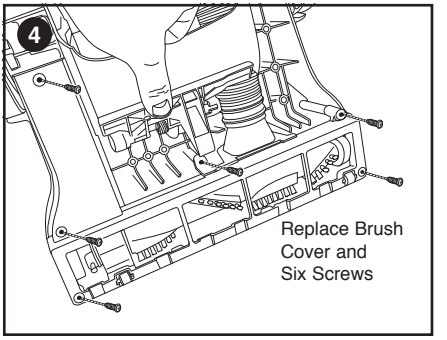

Problem solving

⚠WARNING: To reduce the risk of electric shock, turn power OFF and disconnect plug from electrical outlet before performing maintenance or troubleshooting to the vacuum cleaner.

Vacuum cleaner won't run: Possible causes
1. Vacuum cleaner is not plugged in
2. Blown fuse/tripped breaker

Remedies
1. Check electrical plug
2. Check/replace fuse or reset breaker

Vacuum cleaner won't pick up dirt: Possible causes	**Remedies**
1. Dust cup is full	1. Empty dust cup
2. Filter dirty	2. Check, remove debris or clean
3. Hose not secure	3. Check to be sure hose is snapped into place at both ends
4. Dust cup not in place	4. Make sure dust cup is fully inserted and dust cup release handle is pushed in completely
5. Vacuum path clogged	5. Visually check air passageway, hose inlet, and hose for anything that might be obstructing the vacuum path. Carefully remove blockage
6. Rotating power brush drive belt broken	6. Replace drive belt
7. Drive belt stretched	7. Check drive belt area and remove obstructions Replace drive belt if necessary
8. Floor brush bristles worn	8. Replace floor brush
9. Floor brush jammed	9. Remove floor brush and clean debris from brush and ends Check drive belt for any damage

Replacement Parts

Item□	Part No.□	Part Name□
1	E0101	Brush Tool
2	E0102	Crevice Tool
3	E0103	Hose
4	E0104	Brush Roll
5	E0105	Belt
6	E0106	Bin Filter

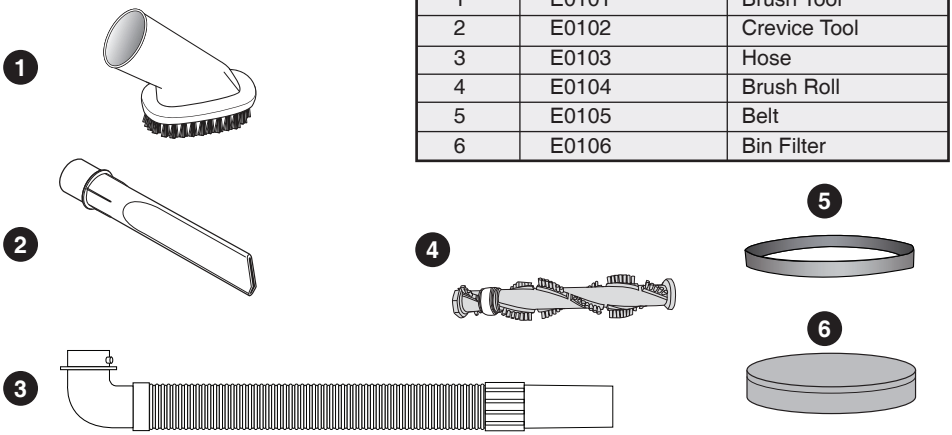

Please do not return this product to the store

For any questions or concerns, Eureka is happy to be of service.
Contact us directly at 1-800-282-2886

The Eureka one-year limited warranty

Midea America Corp. (“Eureka”), subject to the terms and conditions herein, warrants this vacuum cleaner to be free from defects in material and workmanship for a term of one year from the date of original purchase when used in accordance with the Eureka operating and maintenance instructions and under normal household usage. This warranty is granted only to the original purchaser and members of immediate household, and is applicable only to original purchases from Eureka authorized resellers.

What Eureka will do:

Eureka will, at its option, repair or replace a defective vacuum or vacuum part that is covered by this warranty. Repairs may be performed using new or refurbished parts that meet or exceed Eureka specifications for new parts. If Eureka elects to replace the vacuum, the replacement may be a reconditioned unit. Depending on availability of products, Eureka reserves the right to provide you with a replacement product that is the same or similar, or substitute equivalent of the original product. As a matter of warranty policy, Eureka will not refund the consumer’s purchase price.

This warranty does not cover:

- Normal wear and tear of the vacuum and vacuum parts that require replacement under normal use such as disposable dust bags, filters, drive belts, light bulbs, brush-roll, bristles, impellers and cleaning.
- Damages or malfunctions resulting from: improper or unreasonable use or maintenance, abuse, negligence, failure to follow instructions contained in any written materials that accompany the product, deterioration by reason of excess moisture, corrosive atmosphere, lightning, power surges, connections to improper voltage supply, unauthorized alteration, or other external causes such as extremes in temperature or humidity, modifications, scratches or discoloration, accidents, misuse, or acts of God. This warranty also does not cover damage resulting from repair or attempted repair by anyone other than Eureka. This warranty is not applicable to any product that has been altered or on which the serial number has been defaced, modified or removed. Altering, erasing, or forging any proof-of-purchase documents voids any applicable product warranty.

Obtaining warranty service:

To obtain warranty service you must contact the Eureka Service Team, toll free, at 1-800-282-2886 or email eureka@speedymail.com, to discuss the warranty claim and procedures to be followed. All warranty claims must include submission of proof-of-purchase documentation. For additional information, you may also visit www.eureka.com.

Shipping charges:

You will be responsible for any initial shipping and insurance charges if the defective product(s) must be shipped for warranty service or warranty evaluation; however, Eureka will pay the return shipping charges if repairs are covered by the warranty.
When returning parts for repair, you must include the model, type and serial number located on the rating plate. If any product submitted for warranty service is found to be ineligible, an estimate of repair cost will be furnished and the repair performed only if requested by the owner and upon receipt of payment or acceptable arrangements for payment.

Further limitations and exclusions:

Any warranty that may be implied in connection with your purchase or use of the vacuum, including any warranty of Merchantability or any warranty of Fitness For A Particular Purpose is limited to the duration of this limited warranty. Some states do not allow limitations on how long an implied warranty lasts, so the above limitations may not apply to you.

Your relief for the breach of this warranty is limited to the relief expressly provided above. In no event shall the manufacturer be liable for any consequential or incidental damages you may incur in connection with your purchase or use of the vacuum. Some states do not allow the exclusion or limitation of incidental or consequential damages, so the above limitation or exclusion may not apply to you.

This warranty gives you specific legal rights. You may also have other rights, which may vary by state.

Midea America Corp.
200 Rivers Edge Drive
Medford, MA. 02155
USA

NEU100 series

Upright vacuum cleaner; household type

Owner's Guide

Thank you for purchasing your new Eureka vacuum!

Important instructions

For easy assembly, please take a few moments to read this owner's guide.

If you have questions about your new vacuum, please contact our customer service HELPLINE at 1-800-282-2886.
We're here to help!

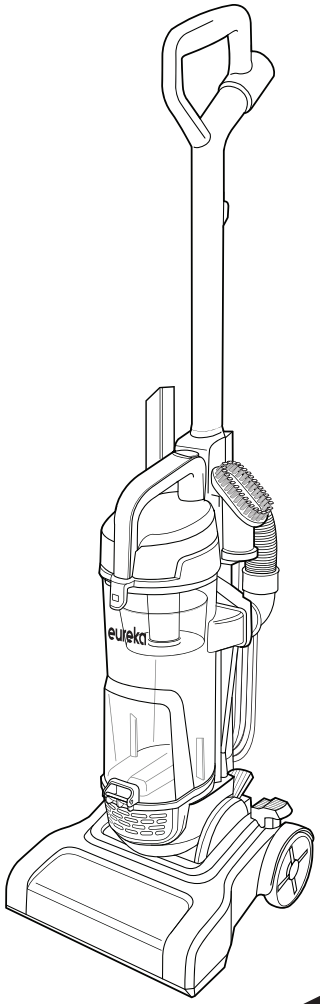

THE eureka CLEAN PROMISE
PERFORMANCE
QUALITY • VALUE

Eureka stands by our Clean Promise seal. Learn more at www.eureka.com/cleanpromise

www.eureka.com

eureka