REDMOND

PERSONAL BLENDER

User Manual



Model: BL019

Thank you for purchasing this product. To ensure your correct use and trouble-free operation, please read this manual carefully and keep it properly for future reference.

Specification

Outer appearance and dimension of the product



Model	BL019
Level	3 levels for speed regulation Level 1/RPM:17000 Level 2/RPM: 21000 PULSE/RPM: 21000
Power	250W
Input Voltage	120 V / 60 Hz
Operating Time	≤1 Min
Interval	≥2 Min
Self-protecting Time	≥10 Min
Noise Level	≤75dB
Accessory	Personal Blender *1 20Oz/600ml Tritan Cups *2 304 Stainless Blades *1 User Manual*1 Cleaning Sponge *1 Portable Cup Lid *2 Silicone Ice Tray *1
Main Unit Size	5.5 x 5.3 x 16.1 in (140 x 135 x 410 mm)
Product Size	5.1 x13.3 in (130 x 340 mm)
Main Unit Weight	1.45kg



Cup: 2PCS, Tritan material, BPA Free Cups



Cup lid: 2PCS, portable cup lid with a handle, easy to carry.



Ice tray: Food grade silicone ice tray.



Button Function :
2 speed levels for regular mixing, "P" level speed for high-speed mixing.



Cleaning sponge: High density cleaning sponge ensures your light-hearted cleaning.



Mixing blade assembly: 304 food grade stainless steel, 6-piece blade assembly.

Steps



1.Cut ingredients into small pieces, add the right amount of liquid (Max: 20oz/600ml)



2.Install the cup as directed.①



3.Choose the appropriate speed to stir the ingredients fully.



4.Use to-go lids, easy to carry.

*① : *For installing the cup, please refer to the "Details" page.*

Details

1.Put the food material and water into the Tritan cup (**please cut the food material into about a size of about 1inch / 2cm**, and then add an appropriate amount of water; it is recommended that the water height be greater than the height of the food material), and the capacity should not be greater than 20Oz/600ml.

2.Insert the blade base into the Tritan cup, turn it clockwise and lock it.The assembling steps of the blade base are to install and lock clockwise.

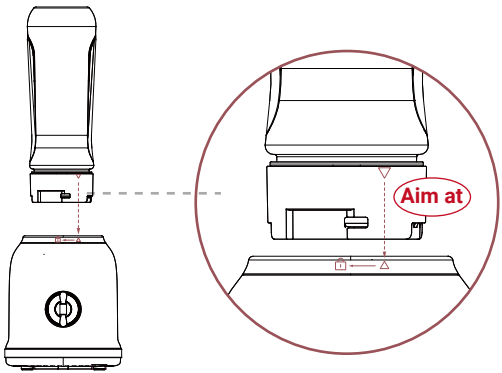

Step 1

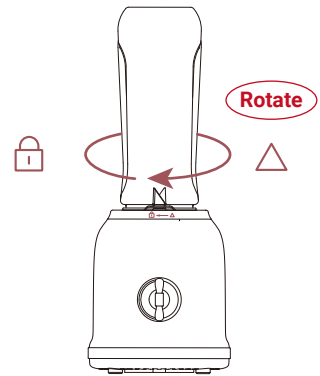

Step 2

3.Turn the power switch to level 1 or 2 to stir and mix automatically. When any hard object is encountered, you can turn to level P for high-speed stirring and mixing. Make sure to turn the power knob to level 0 and turn off the power after the stirring and mixing is completed.

4.After stirring and mixing is completed, please take out the cup body upward counterclockwise, and put on the dedicated lid to enjoy the drink.



Caution

- **Because different food materials have different stirring methods and time, it is recommended that the stirring and mixing time be≤1 minute and the interval ≥2 minutes; If the stirring and mixing time is too long, the automatic protection device of the blender will be triggered, and you will need to wait for about 5 minutes to start the blender from level 0.**
- Only water of normal temperature or ice water can be added into this blender for stirring and mixing. Do not add hot water or add no water for stirring, for this will damage the knife seat or cause water leakage.
- There's a food-grade leakproof silicone ring in the knife seat and the circular ring in the cup lid. Make sure that the silicone ring is installed properly before each stirring and mixing. If it falls off, install it properly before use to avoid water leakage during stirring and mixing.
- After stirring and mixing is completed, take out the cup body upward counterclockwise, and put on the dedicated lid to enjoy the drink.
- Quick-frozen food should be thawed before stirring and mixing. Otherwise, it is easy to wear the blade or get the blade stuck, and the device will not work properly.
- Never process boiling liquids (max 130°F/54°C).
- Not to blend with less than 1/3 liquid.
- Do not exceed the maximum capacity mark of the cup.

- Cut fruits and vegetables into ¾-inch, 1-inch, otherwise, it will lead to overload and damage motor.

Troubleshooting

Peculiar noise, odor or smoke, etc	Cut off the power and stop using immediately.
The product cannot work	1.Check if the power supply is properly connected. 2.Check if the switch is turned on. 3.Check if the mixing cup is installed in place. 4.The product enters the over-heat prevention state. Please turn the speed to lever "0", wait for 10-15 minutes to restart it.
The blade cannot work	1.Please confirm if the blade gets stuck or not. 2.Check if the knife seat is locked clockwise or not. 3.Check if the switch is turned on or not.

If the product cannot work after the above check, please contact us in time, and we will do our best to serve you.

Cleaning and maintenance

1.After the mixing cup finishes working, add water into it, and the cup body and the knife seat assembly can be cleaned quickly by making use of the working mode of the device. Do not clean the mixing cup with the dishwasher and dryer.
2.Take off the power plug, and the external part of the main unit can be wiped with dry cloth. Do not put the main unit into water or other liquids, nor rinse it in the water or other liquids. Otherwise, electric leakage may occur, or parts may be damaged.
3.For cleaning, please rinse the cup body, knife seat and accessories with water, and wipe them dry. The blade is very sharp. Take care in cleaning to avoid being injured, and you can wear protective gloves in cleaning.
4.Do not use steel balls, abrasive cleaners or corrosive liquids (such as gasoline or acetone) to clean the product.
5.Do not use any diluent or bleach to clean the product. After washing the parts with water, wipe them thoroughly.
6.If the parts are stained with fruit and vegetable juice, wipe them with a few drops of edible oil before washing, which can better remove the staining.
7.Do not expose the product, power cord, accessories and packaging to the sun.

THANK YOU FOR PURCHASING OUR PRODUCTS !

Your satisfaction and support mean everything to us.
To offer you the best shopping experience, we provide a **12-month warranty** for our products.
If you have any issues with our products, please feel free to contact the seller or E-mail: ✉ | **cs@redmond.shop**
our customer support team are at your service 7 days/ 24 hours and will try our best to solve your problem.
We also look forward to receiving any advice from you about our products or service and we will make efforts to make them better.